OUTLINE DRAWING | PART NO. MMSP-15094

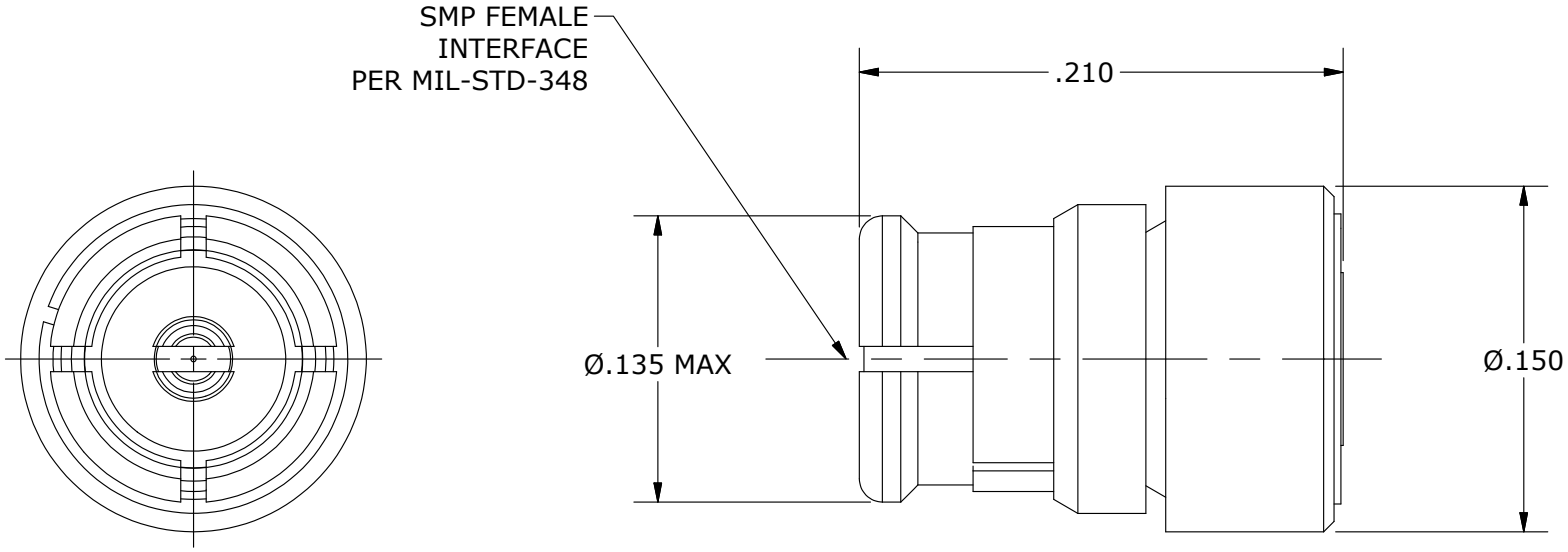

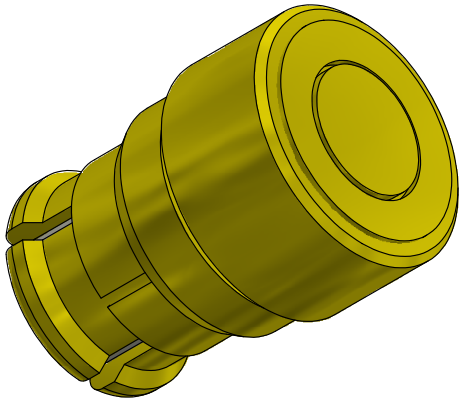

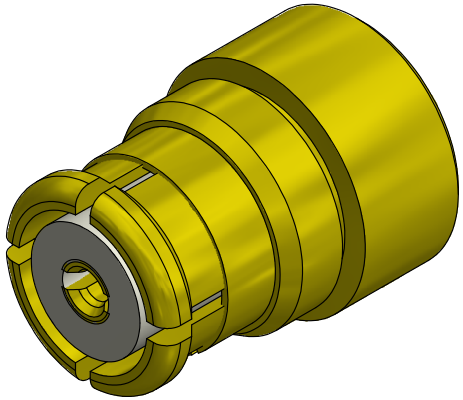

COMPONENT	MATERIAL	FINISH
BODY, CONTACT, ANTI-ROCK RING, EMI RING, END CAP	BeCu, ASTM B196, UNS C17300	GOLD PLATE, MIL-DTL-45204, TYPE 1, GRADE C, CLASS 1
INSULATOR	PTFE PER ASTM D1710 TYPE 1, GRADE 1, CLASS A	

MICRO-MODE PRODUCTS, INC.
The Reliable Connection to the Future

El Cajon, CA 92020
ph 619.449.3844
www.micromode.com

CAGE CODE 15907

ASSEMBLY PROCEDURES: N/A

TOOL: MMTL-4991

SHEET 1 OF 1 | 2/21/2017 | SE | MT

MMSP, FEMALE TERMINATION
50 OHM

PART NO. MMSP-15094

REVISION -