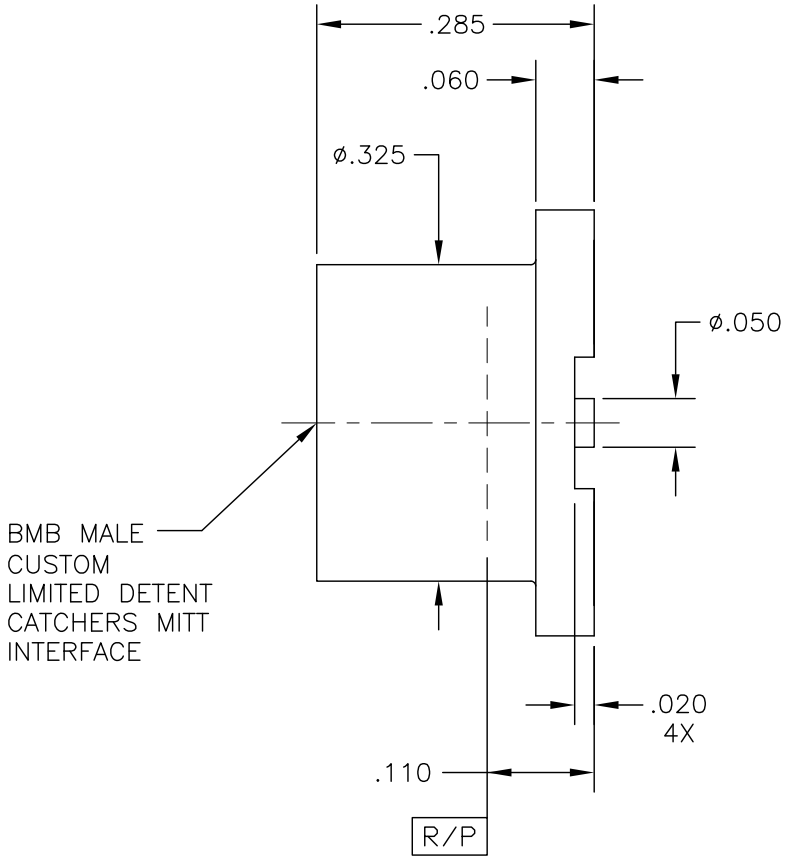

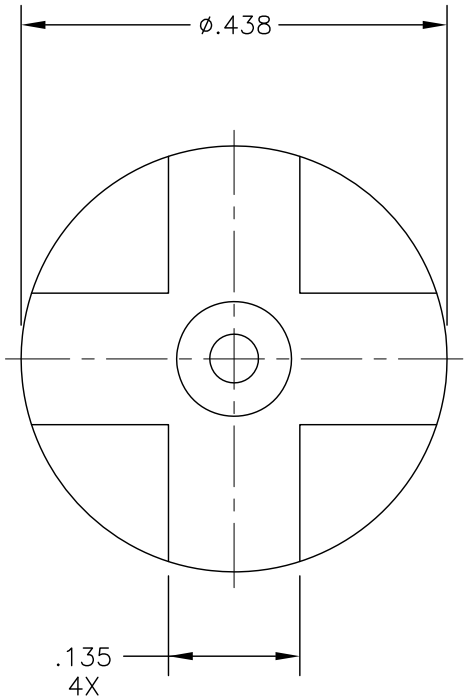

COMPONENT	MATERIAL & FINISH	
BODY & CONTACT	BeCu, ASTM B196, UNS C17300	GOLD PLATE, MIL–G–45204, TYPE 1, GRADE C, CLASS 1
INSULATOR	PTFE, ASTM D1710, TYPE I, GRADE 1, CLASS A	

MICRO–MODE PRODUCTS, INC.
The Reliable Connection to the Future

El Cajon, CA 92020
ph 619.449.3844
www.micromode.com

CAGE CODE 15907

ASSY PROCEDURES: N/A

INSERTION/EXTRACTION TOOL: N/A

BMB MALE, CUSTOM LDCM
SURFACE MOUNT, ø.050 CONTACT

PART NO. MBMB–12749

REVISION –

SHEET 1 OF 2 | OL12749 8–6–13 . MP

PART NO. MBMB–12749 | OUTLINE DRAWING

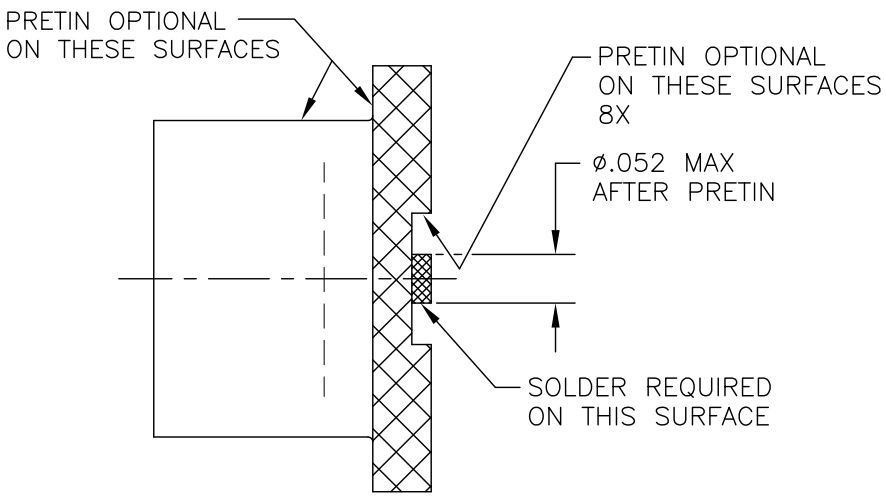

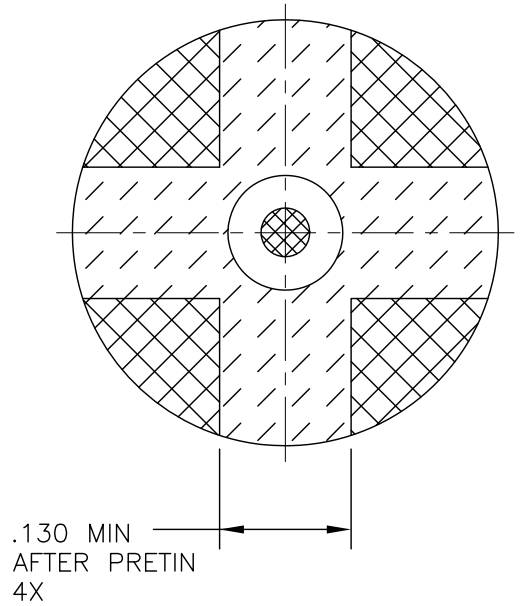

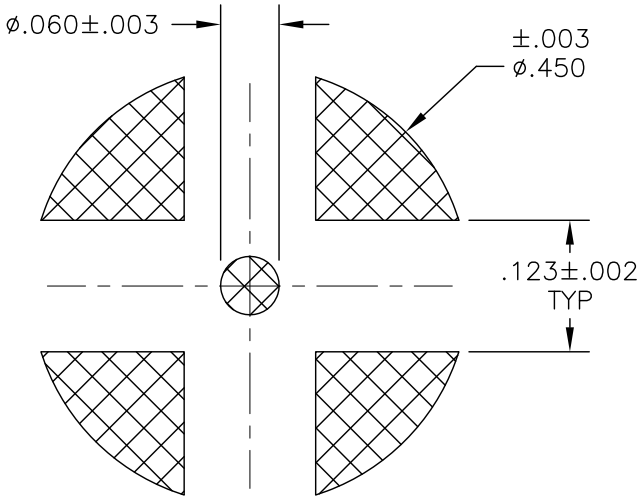

PAD LAYOUT

PRE–TIN REQUIRED
(Sn63 SOLDER)

PRE–TIN OPTIONAL

MICRO–MODE PRODUCTS, INC. *The Reliable Connection to the Future*	El Cajon, CA 92020 ph 619.449.3844 www.micromode.com		CAGE CODE 15907
ASSY PROCEDURES: N/A	BMB MALE, CUSTOM LDCM SURFACE MOUNT, ø.050 CONTACT		
INSERTION/EXTRACTION TOOL: N/A	PART NO. MBMB–12749		REVISION –
SHEET 2 OF 2	OL12749 8–6–13 . MP		

PART NO. MBMB–12749 | OUTLINE DRAWING