OUTLINE DRAWING | PART NO. MMSP-5324

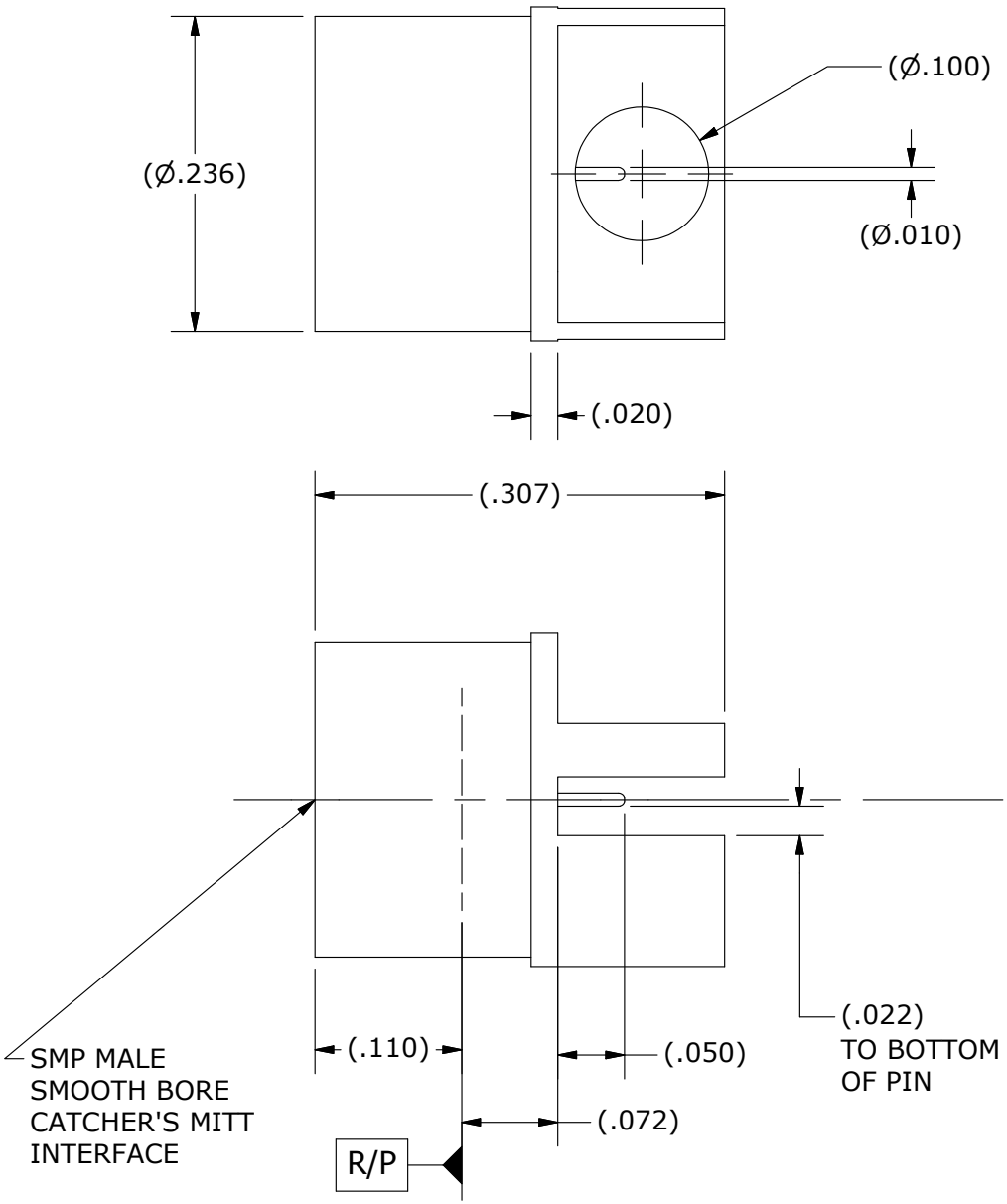

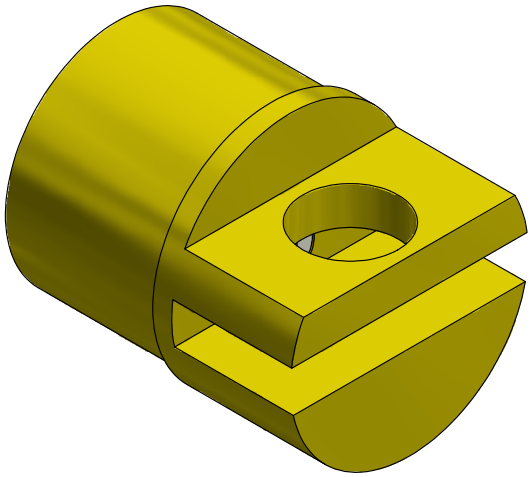

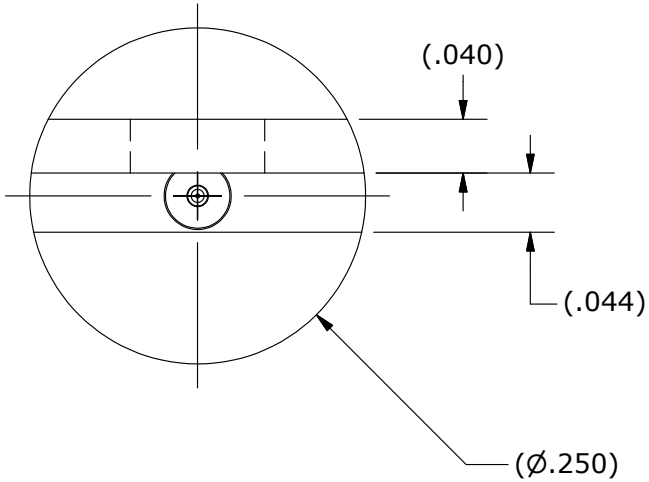

COMPONENT	MATERIAL	FINISH
BODY & CONTACT	BeCu, ASTM B196, UNS C17300	GOLD PLATE, MIL-DTL-45204, TYPE 1, GRADE C, CLASS 1
INSULATOR	PTFE PER ASTM D1710 TYPE 1, GRADE 1, CLASS A	

MICRO-MODE PRODUCTS, INC.
The Reliable Connection to the Future

El Cajon, CA 92020
ph 619.449.3844
www.micromode.com

CAGE CODE 15907

ASSEMBLY PROCEDURES: N/A

TOOL: N/A

SHEET 1 OF 1 | 12/04/2014 | AC

MMSP (SBCM), STRAIGHT EDGE LAUNCH

PART NO. MMSP-5324

REVISION -