OUTLINE DRAWING | PART NO. MMSP-14089

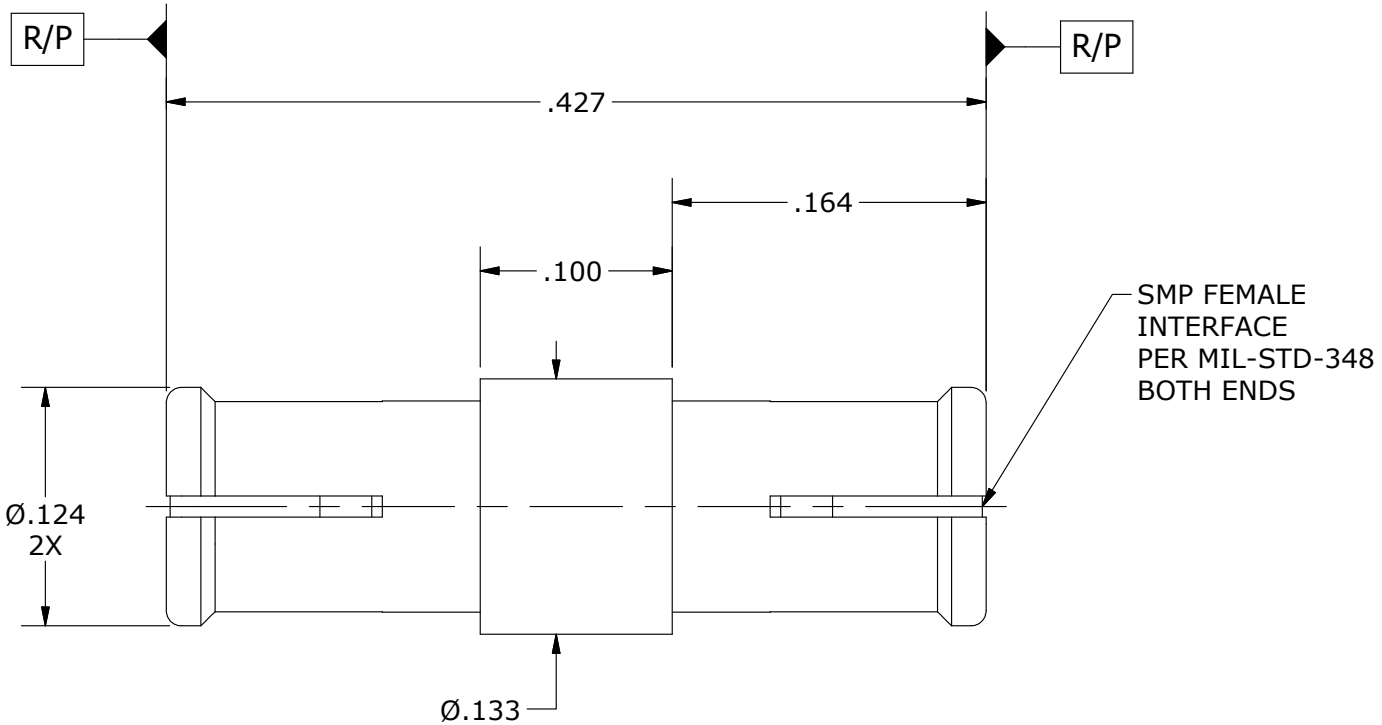

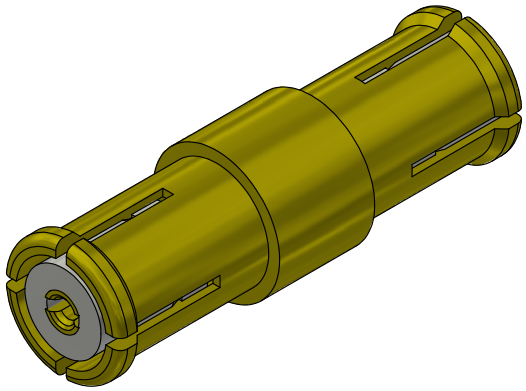

COMPONENT	MATERIAL	FINISH
BODY & CONTACT	BeCu, ASTM B196, UNS C17300	GOLD PLATE, MIL-DTL-45204, TYPE 1, GRADE C, CLASS 1
INSULATORS	PTFE PER ASTM D1710 TYPE 1, GRADE 1, CLASS A	

MICRO-MODE PRODUCTS, INC.
The Reliable Connection to the Future
El Cajon, CA 92020
ph 619.449.3844
www.micromode.com

CAGE CODE 15907

ASSEMBLY PROCEDURES: N/A

TOOL: MMTL-15363

SHEET 1 OF 1 | 3/27/2015 | BJ

MMSP (F) .427 OAL
BLINDMATE INTERCONNECT

PART NO. MMSP-14089

REVISION -