COMPONENT	MATERIAL AND FINISH	
BODY, PIN	KOVAR PER MIL-I-23011 ASTM F-15	GOLD PLATE, MIL-G-45204, TYPE 1, GRADE C, CLASS 1
GLASS	CORNING #7070 OR EQUIVALENT	

PART NO. MSSS-8735

OUTLINE DRAWING

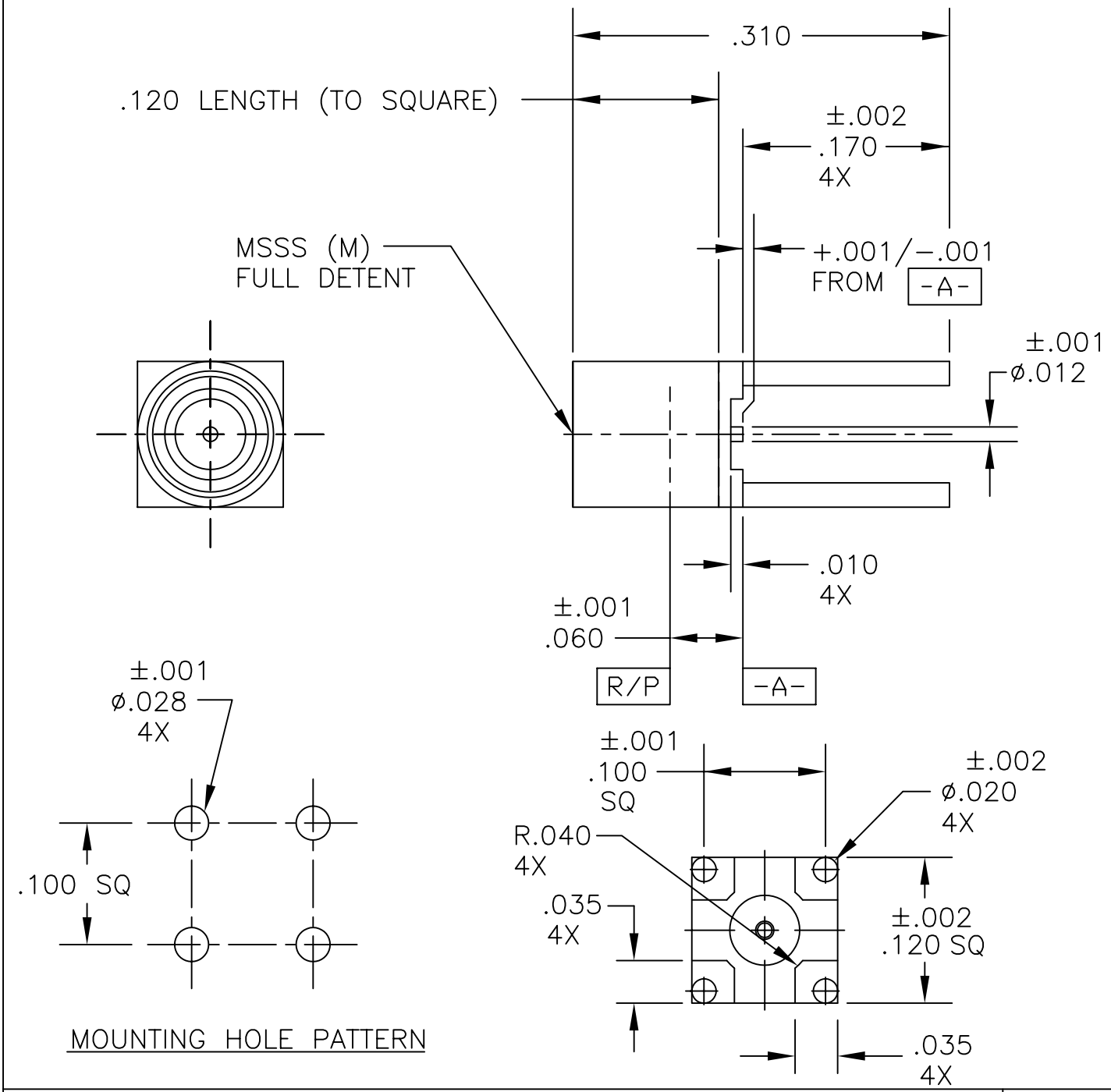

MOUNTING HOLE PATTERN

MICRO-MODE PRODUCTS, INC.
The Reliable Connection to the Future

El Cajon, CA 92020
ph 619.449.3844
www.micromode.com

CAGE CODE 15907

ASSY PROCEDURES: N/A

INSERTION/EXTRACTION TOOL: N/A

MSSS (FULL DETENT) WITH
SURFACE MOUNT PIN & PCB MOUNT LEGS

PART NO. MSSS-8735

REVISION 01

SHEET 1 OF 1 | OL8735 9-27-06 MP .