COMPONENT	MATERIAL AND FINISH	
SHROUD	303 CRES, ASTM A582	PASSIVATE AMS-QQ-P-35

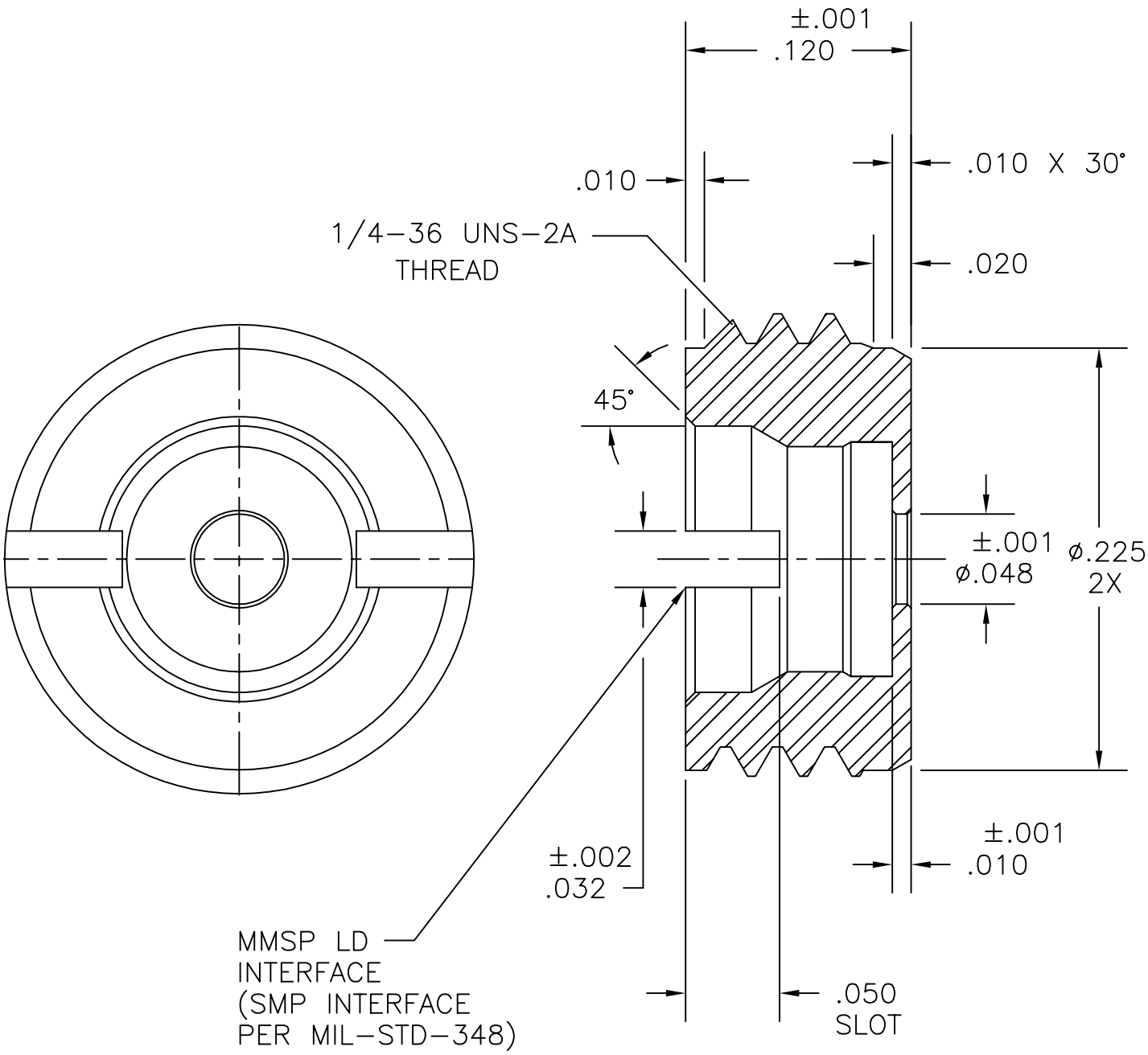

PART NO. MMSP-7069

OUTLINE DRAWING

MICRO-MODE PRODUCTS, INC.
The Reliable Connection to the Future

El Cajon, CA 92020
ph 619.449.3844
www.micromode.com

CAGE CODE 15907

ASSY PROCEDURES:

INSERTION/EXTRACTION TOOL: .

MMSP, LIMITED DETENT,
THREAD-IN SHROUD

PART NO. MMSP-7069

REVISION 03

SHEET 1 OF 1 | OL7069 10-14-03 EB DR