COMPONENT	MATERIAL AND FINISH	
BODY & CONTACT	BeCu, ASTM B196, UNS C17300	GOLD PLATE, MIL-G-45204, TYPE 1, GRADE C, CLASS 1
INSULATOR	PTFE, ASTM D1710, TYPE I, GRADE 1, CLASS A	
MSSS HEAD & CAP	303 CRES, ASTM A582	PASSIVATE, QQ-P-35,

PART NO. MSSS-6731

OUTLINE DRAWING

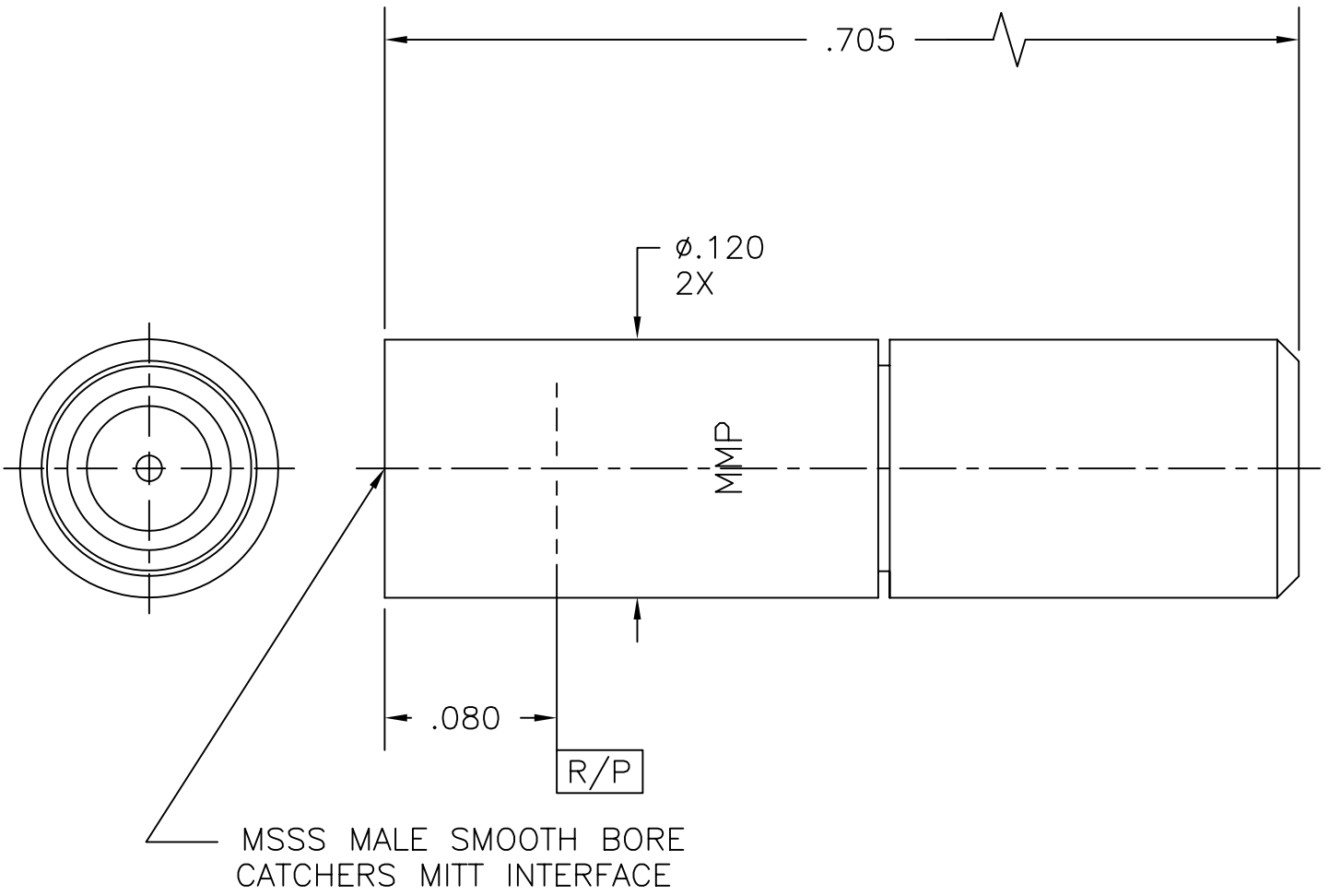

MICRO-MODE PRODUCTS, INC.
The Reliable Connection to the Future
El Cajon, CA 92020
ph 619.449.3844
www.micromode.com

CAGE CODE 15907

ASSY PROCEDURES:

INSERTION/EXTRACTION TOOL:

MSSS, MALE, SMOOTH BORE CATCHERS MITT TERMINATION, 50 Ohms

PART NO. MSSS-6731

REVISION A

SHEET 1 OF 1 | OL6731 12-4-00 RF MP