| COMPONENT | MATERIAL AND FINISH | |
|---|---|---|
| HOUSING, CONTACT | BeCu, ASTM B196, UNS C17300 | GOLD PLATE, MIL-G-45204, TYPE 1, GRADE C, CLASS 1 |
| INSULATOR | PTFE, ASTM D1710, TYPE I, GRADE 1, CLASS A | |

PART NO. MMSP-4832

OUTLINE DRAWING

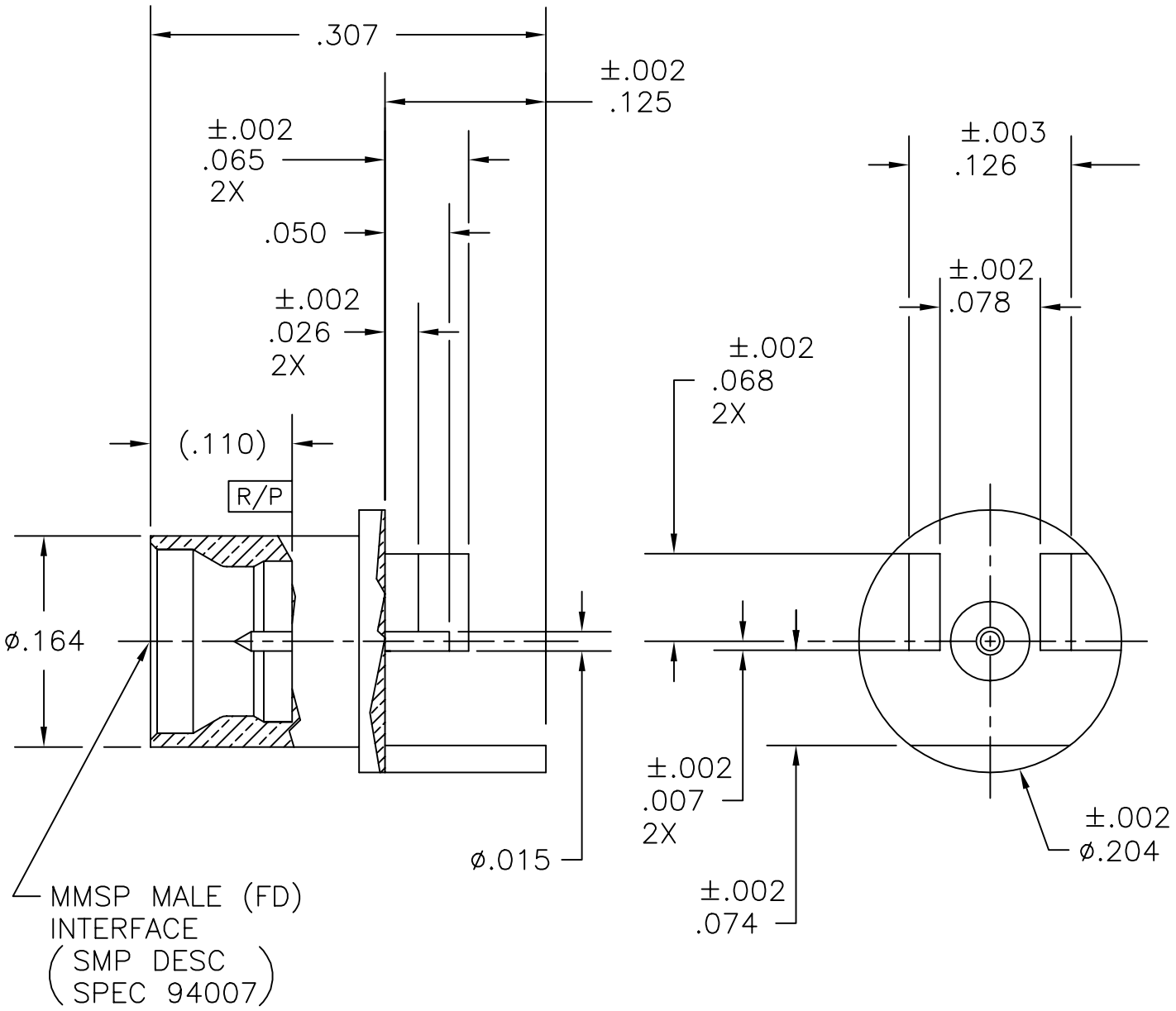


MICRO-MODE PRODUCTS, INC.
*The Reliable Connection to the Future*

El Cajon, CA 92020
ph 619.449.3844
www.micromode.com

CAGE CODE 15907

ASSY PROCEDURE: N/A

LOCATOR TOOL: N/A

MMSP, MALE, FULL DETENT
STRAIGHT EDGE LAUNCH

PART NO. MMSP-4832

REVISION —

SHEET 1 OF 1 | OL4832 10-29-01 EB DR