| COMPONENT | MATERIAL AND FINISH | |
|---|---|---|
| BODY, CONTACT, CABLE ADAPTER, EMI RINGS | BeCu, ASTM B196, UNS C17300 | GOLD PLATE, MIL-G-45204, TYPE 1, GRADE C, CLASS 1 |
| INSULATOR, CABLE STOP | PTFE, ASTM D1710, TYPE I, GRADE 1, CLASS A | |
| FLOAT MOUNT BODY, BUSHING | 303 CRES, ASTM A582 | PASSIVATE, AMS-QQ-P-35 |
| SNAP RING | BeCu, ASTM B196, UNS C17300 | NICKEL PLATE, MIL-C-26074 CLASS 1 |
| WASHER | 300 SERIES CRES | PASSIVATE, AMS-QQ-P-35 |
| SPRING | MUSIC WIRE | NICKEL PLATE, QQ-N-290 |

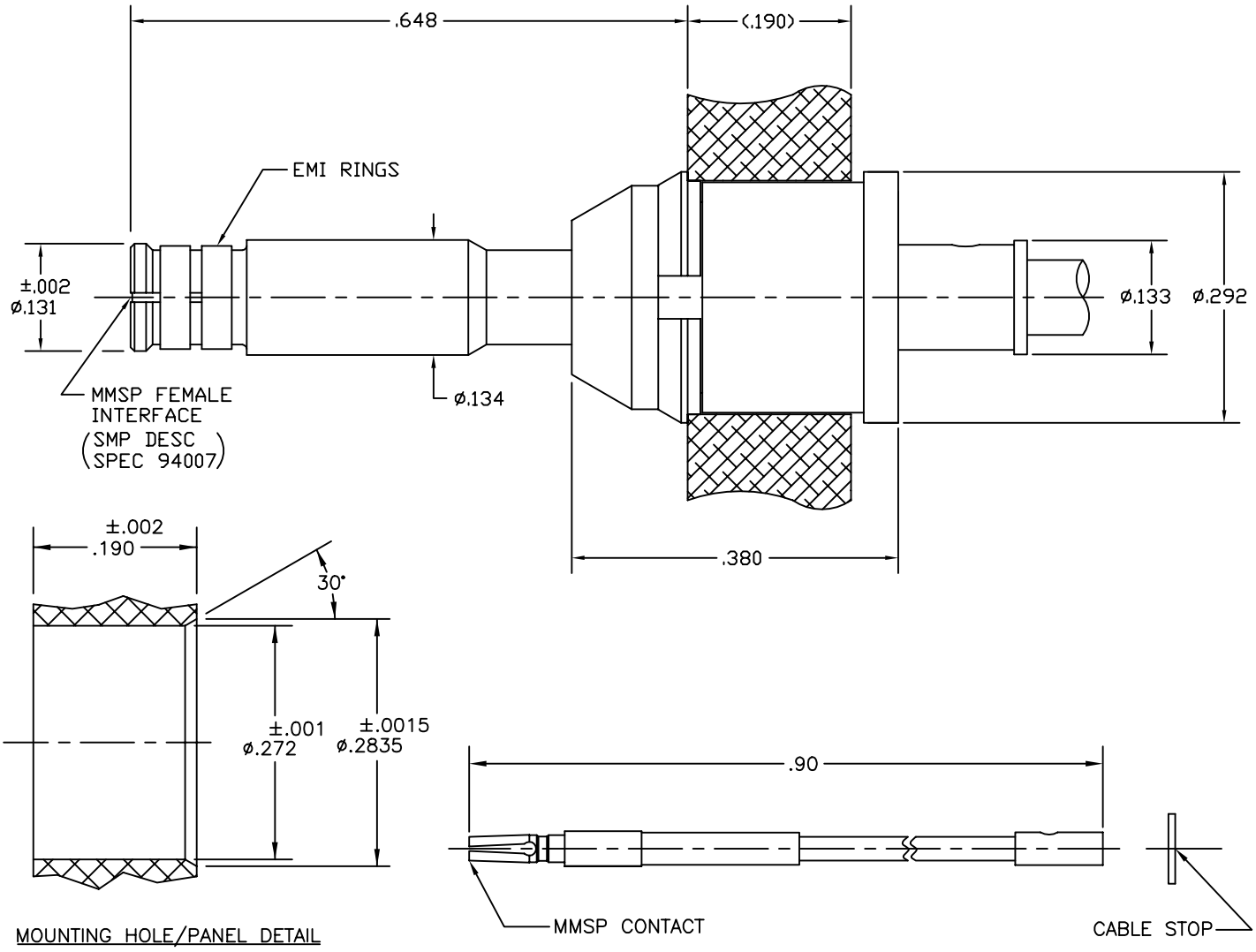


MICRO-MODE PRODUCTS, INC.
*The Reliable Connection to the Future*

El Cajon, CA 92020
(619) 449-3844

CAGE CODE 15907

ASSY PROCEDURES: MMAP-4253

INSERTION/EXTRACTION TOOL: MMTL-7530

MMSP, FEMALE, STRAIGHT, SNAP-IN FLOAT MOUNT TO .086 LOW LOSS CABLE HC60009-3

PART NO. MMSP-4270

REVISION —

SHEET 1 OF 1 | OL4270 05-03-01 RF EB

PART NO. MMSP-4270

OUTLINE DRAWING