# OUTLINE DRAWING | PART NO. MADP–10347

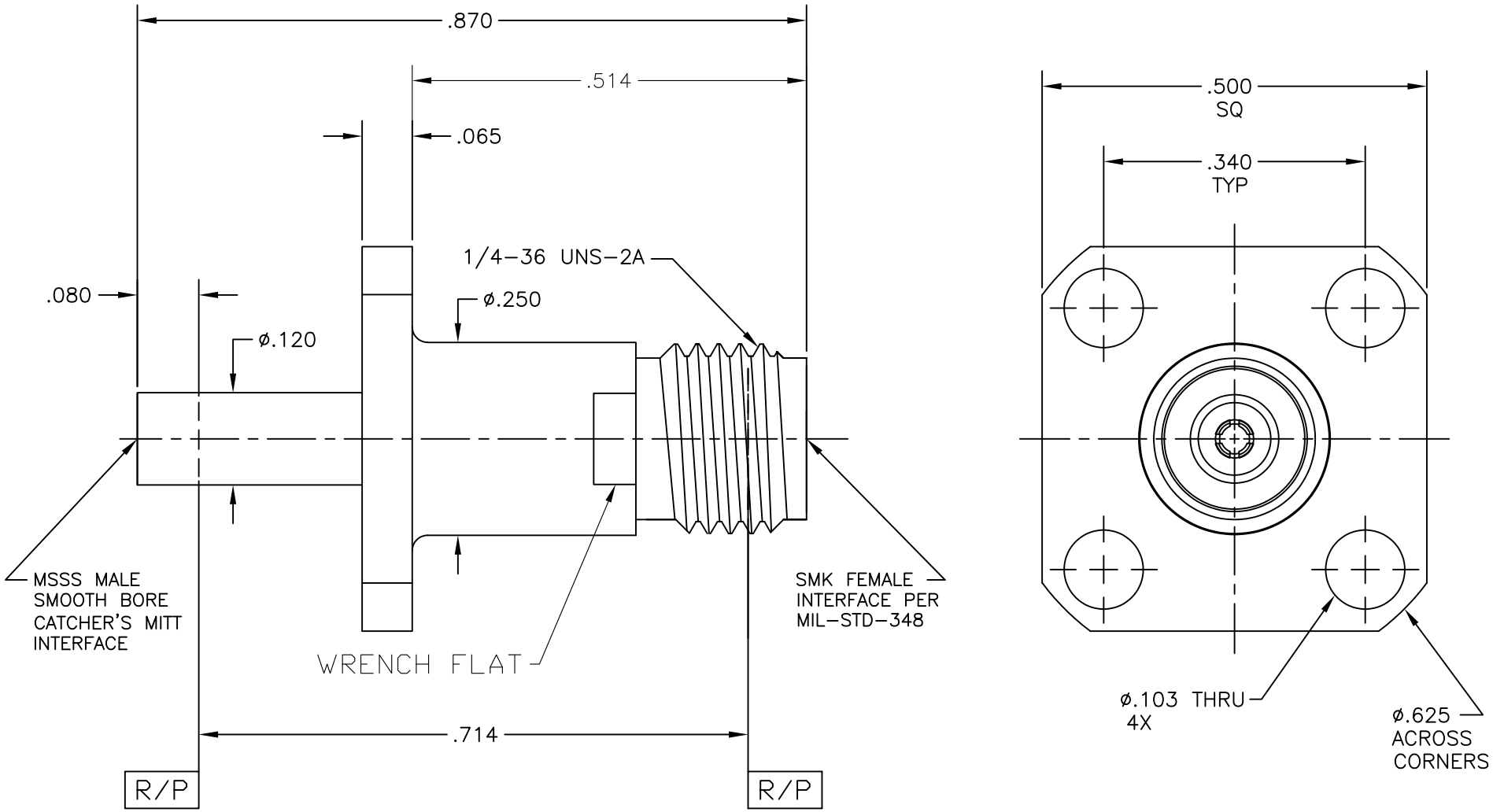


| COMPONENT | MATERIAL & FINISH | |
|---|---|---|
| BODY & CONTACT | BeCu, ASTM B196, UNS C17300 | GOLD PLATE, MIL–G–45204, TYPE 1, GRADE C, CLASS 1 |
| INSULATOR | PTFE, ASTM D1710, TYPE I, GRADE 1, CLASS A | |
| INTERFACE BUSHING | 303 CRES, ASTM A582 | PASSIVATE, AMS–QQ–P–35 |

MICRO–MODE PRODUCTS, INC.
*The Reliable Connection to the Future*

El Cajon, CA 92020
ph 619.449.3844
www.micromode.com

CAGE CODE 15907

ASSY PROCEDURES: N/A

INSERTION/EXTRACTION TOOL: N/A

MSSS (M) SBCM TO
SMK FEMALE ADAPTER

PART NO. MADP–10347

REVISION B

SHEET 1 OF 1 | OL10347 3–16–07 MP .

PART NO. MADP–10347 | OUTLINE DRAWING