OUTLINE DRAWING | PART NO. MADP–13745

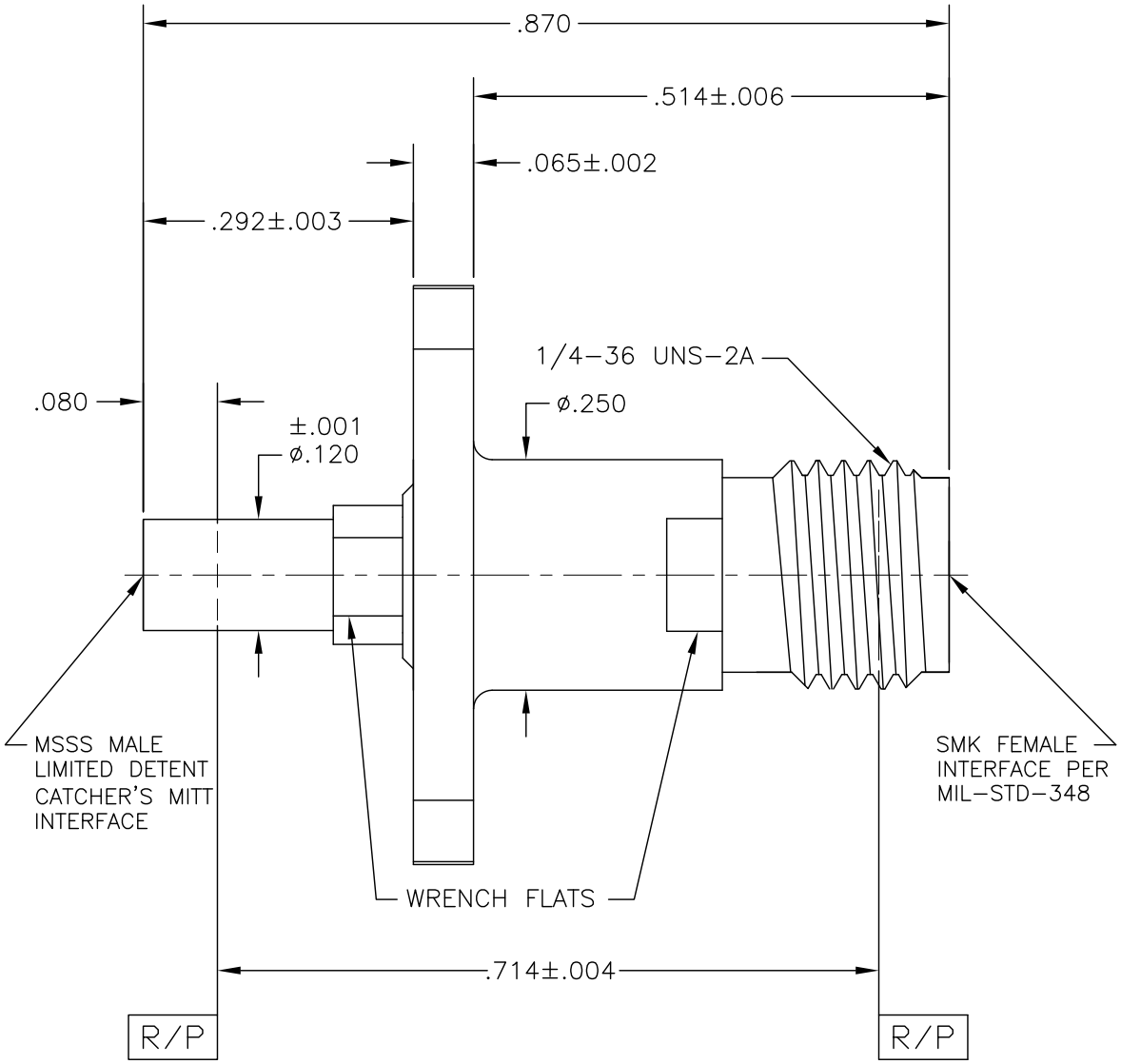

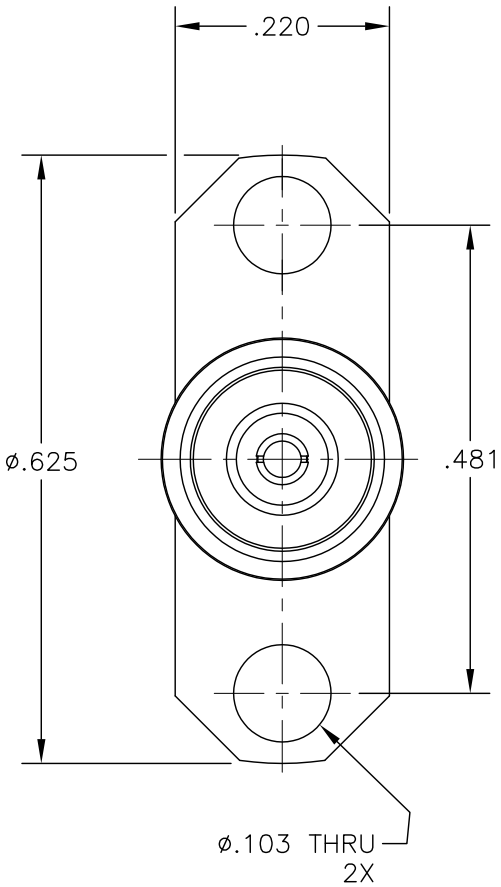

COMPONENT	MATERIAL & FINISH	
BODY & CONTACT	BeCu, ASTM B196, UNS C17300	GOLD PLATE, MIL–G–45204, TYPE 1, GRADE C, CLASS 1
INSULATOR	PTFE, ASTM D1710, TYPE I, GRADE 1, CLASS A	
BODY	303 CRES, ASTM A582	PASSIVATE, AMS–QQ–P–35

MICRO–MODE PRODUCTS, INC.
The Reliable Connection to the Future

El Cajon, CA 92020
ph 619.449.3844
www.micromode.com

CAGE CODE 15907

ASSY PROCEDURES: N/A

INSERTION/EXTRACTION TOOL: N/A

MSSS (M) LDCM TO
SMK FEMALE ADAPTER

PART NO. MADP–13745

REVISION 01

SHEET 1 OF 1 | 11–6–14 MP .

PART NO.

OUTLINE DRAWING