COMPONENT	MATERIAL AND FINISH	
CONTACT, CABLE ADAPTER	BeCu, ASTM B196, UNS C17300	GOLD PLATE, MIL-G-45204, TYPE 1, GRADE C, CLASS 1
BODY	303 CRES, ASTM A582	PASSIVATE, AMS-QQ-P-35
INSULATOR	PTFE, ASTM D1710, TYPE I, GRADE 1, CLASS A	
SNAP RING	BeCu, ASTM B196, UNS C17300	NICKEL PLATE PER MIL-C-26074

PART NO. MSSP-3707

OUTLINE DRAWING

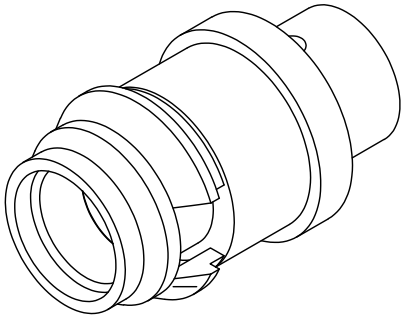

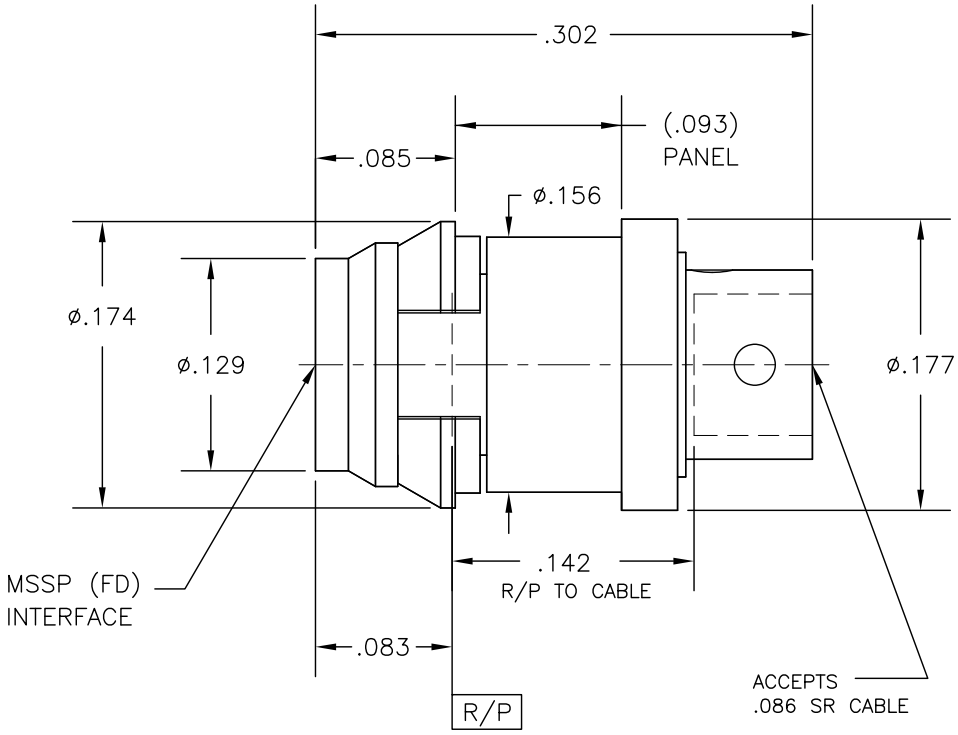

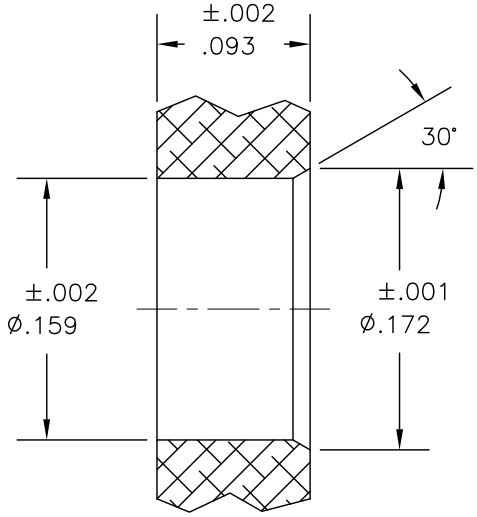

PANEL AND MOUNTING HOLE

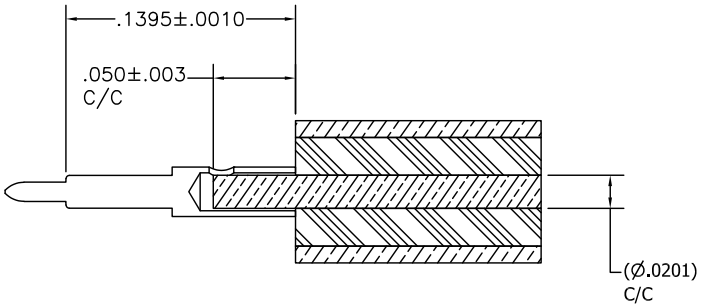

CABLE TRIM

MICRO-MODE PRODUCTS, INC.
The Reliable Connection to the Future

El Cajon, CA 92020
ph 619.449.3844
www.micromode.com

CAGE CODE 15907

ASSY PROCEDURES: MMAP-3815

INSERTION/EXTRACTION TOOL: MMTL-6483

MSSP, FULL DETENT SNAP-IN TO .086 SR CABLE

PART NO. MSSP-3707

REVISION A

SHEET 1 OF 1 | OL3707 9-6-00 JC EB